NEW!

HarmonicPlanetary®

High-Precision Planetary Gearhead

HPG Series + Rack & Pinion

HarmonicPlanetary® HPG Series, Pinion, and Rack are now available as a set

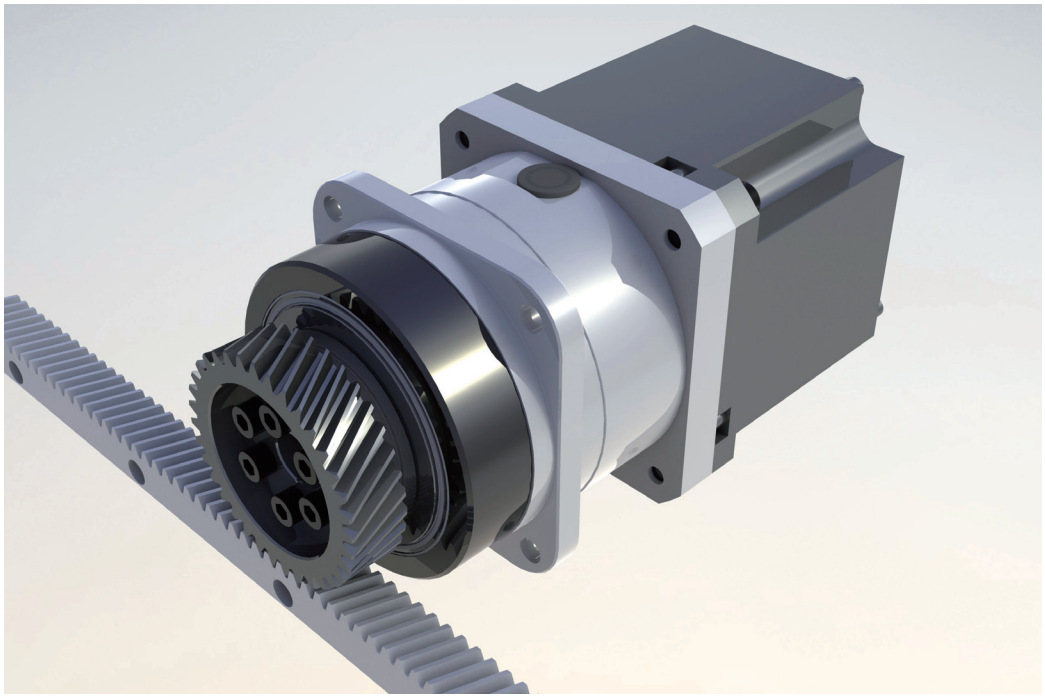

High-Accuracy Helical Rack and Pinion provides:

- Higher positioning accuracy
- Low noise and vibration due to ground finish helical rack and pinion

Standard Specifications

Helix Angle:	19.5283°
Rack:	Induction hardened and ground
	Module 2 x 500 mm, 1000 mm
	Module 3 x 500 mm, 1000 mm
Pinion:	Carburized and ground
	Module 2 Number of teeth 35, 40, 45
	Module 3 Number of teeth 31, 35, 40

HarmonicDrive®

Ordering Code

Rack

RK	3	–	1000	–	HQ	03	–	1	R	1	–	Type
(1)	(2)		(3)		(4)	(5)		(6)	(7)	(8)		(9)

(1)	Model Name	RK: Rack
(2)	Module	2: 2 mm 3: 3 mm
(3)	Length	500: 500 mm 1000: 1000 mm

(4)	Heat treatment	HQ: Induction hardening
(5)	Accuracy code	03: High accuracy
(6)	Installation pitch	1: 125 mm 2: None 3: Special

(7)	Flank Direction	R: Right
(8)	Helix Angle	1: 19.5283°
(9)	Specifications	Blank: Standard SP: Special

Pinion-Equipped Gearhead

HPG – 32R	–	05	– Z	35	XXXX	–	Type
(1)		(2)		(3)	(4)		(5)

(1)	Gearhead (Model name, size, design revision)	HPG-32R HPG-32A HPG-50A
(2)	Reduction Ratio * (2-digit numbers)	03, 04, 05, 06, 07, 08, 09, 10, 11, 15, 21, 33, 45

(3)	Number of teeth of pinion gear *	31, 35, 40, 45
(4)	Motor Adaptation Detail	Motor manufacturer and model number

(5)	Specifications	Blank: Standard SP: Special BL1: Backlash 1 arc-min type, etc.

* Refer to “3-unit combination list” and “Combination type of the pinion-equipped speed reducer and rack”.

3-Unit Combination List

Gearhead	Speed Reducer	HPG-32R	HPG-32A	HPG-50A
	Incorporated Gear	Helical gear	Spur gear	Spur gear
	Reduction Ratio	3, 4, 5, 6, 7, 8, 9, 10	3, 5, 11, 15, 21, 33, 45	3, 5, 11, 15, 21, 33, 45
	Backlash	Standard: 3 arc-min or less/Optional: 1 arc-min or less		
Pinion	Module	2	2	3
	Pressure Angle	20 °		
	Helix Angle	19°31'42” (19.5283°)		
	Flank Direction	Left		
	Heat Treatment	Carburized and ground		
	Tooth Surface Finishing	Grinding		
	Gear Accuracy	JIS N5 class (equivalent to DIN Q6)		
Rack	Module	2	2	3
	Pressure Angle	20 °		
	Helix Angle	19°31'42” (19.5283°)		
	Flank Direction	Right		
	Heat Treatment	Induction hardening		
	Tooth Surface Finishing	Grinding		
	Individual Pitch Deviation	L 500 mm : 6.0 μm L 1000 mm : 6.5 μm		L 500 mm : 6.5 μm L 1000 mm : 7.0μm
	Total Pitch Deviation	L 500 mm : 24 μm L 1000 mm : 32 μm		L 500 mm : 25 μm L 1000 mm : 33 μm

Specifications of the HPG Rack & Pinion System

Gearhead Series	Module [mm]	Number of teeth of pinion gear	Limit for linear thrust [N]	Limit for repeated peak torque [N·m]	Limit for momentary torque [N·m]	Limit for transportation speed [m/min] * for R = 5	Mass of pinion gear [kg]
			Induction hardening rack	Induction hardening rack			
HPG-32R HPG-32A	2	35	5400	200	400	280	1.37
		40	5500	233	450	320	1.62
		45	5600	267	500	360	1.79
HPG-50 A	3	31	9800	483	1100	279	3.14
		35	9900	551	1150	315	3.62
		40	10000	636	1150	360	4.16

Rack Dimensions

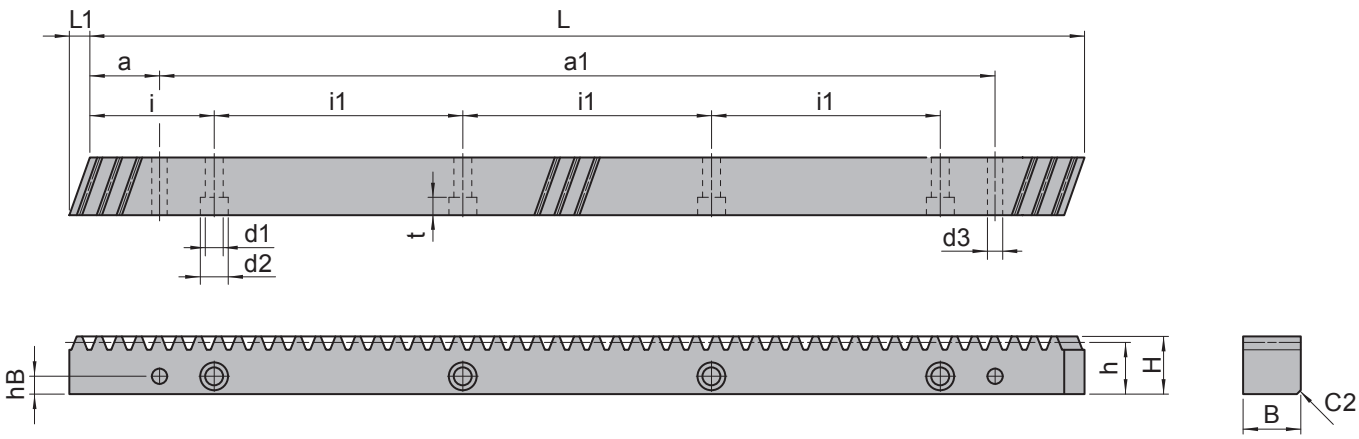

Module m [mm]	Pitch Pt [mm]	Length L [mm]	Number of teeth z	a [mm]	a1 [mm]	B [mm]	d1 [mm]	d2 [mm]	d3 [mm]	hB [mm]	C +0.8/-0.2 [mm]	h [mm]	H [mm]	t [mm]	i [mm]	i1 [mm]	L1 [mm]	Mass M [kg]
2	6.666	500	75	31.7	436.6	24	6.6	11	5.7	8	2	22	24	6.5	62.5	125	8.5	2.0
		1000	150		936.6													4.1
3	10.000	500	50	35.0	430	29	9.0	14	7.7	9	2	26	29	8.6	62.5	125	10.3	2.9
		1000	100		875													5.7

Installation Dimensions

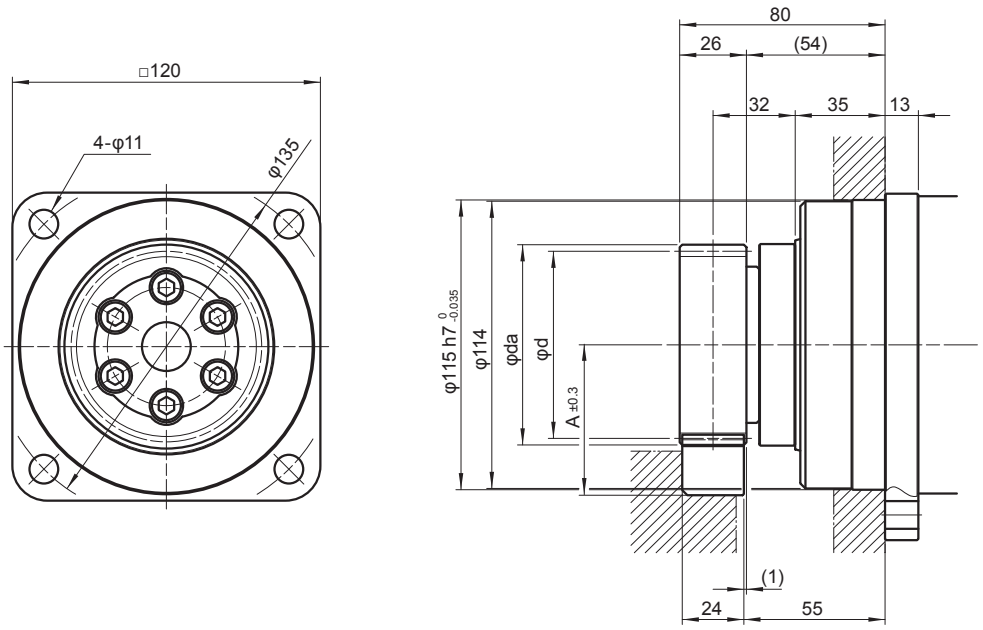

Gearhead Series	Module m [mm]	Number of teeth of pinion gear Z	Mounting distance A±0.3*1 [mm]	Tooth tip circle diameter da [mm]	Pitch circle diameter d [mm]
HPG-32R HPG-32A	2	35	59.7	79.427	74.272
		40	65.0	90.083	84.883
		45	70.2	100.373	95.493

*1: Adjustment tolerance (It is recommended to secure the adjustment mechanism.)

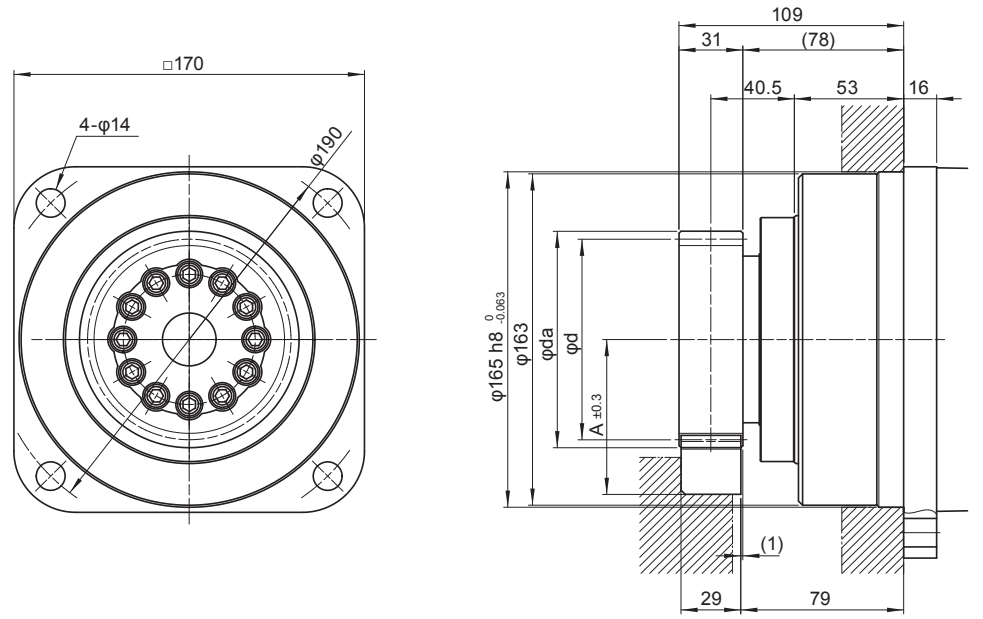

Gearhead Series	Module m [mm]	Number of teeth of pinion gear Z	Mounting distance A±0.3*1 [mm]	Tooth tip circle diameter da [mm]	Pitch circle diameter d [mm]
HPG-50A	3	31	76.2	106.476	98.676
		35	82.6	119.209	111.409
		40	90.6	135.124	127.324

*1: Adjustment tolerance (It is recommended to secure the adjustment mechanism.)

Tightening Torque of Rack Mounting Bolt*

Module m [mm]	Length L [mm]	Bolt size	Number of bolts [Pieces]	Tightening torque [N·m]	Limit for linear thrust [N]
2	500	M6	4	15.3	6380
	1000		8		12770
3	500	M8	4	37.2	11620
	1000		8		23240

* Recommended bolt: JIS B 1176 Hexagon socket head bolt (Strength classification: 12.9 or higher in JIS B 1051)

Pinion Runout Accuracy

Runout accuracy of the pinion gear installed on the gearhead is 15μm or less.

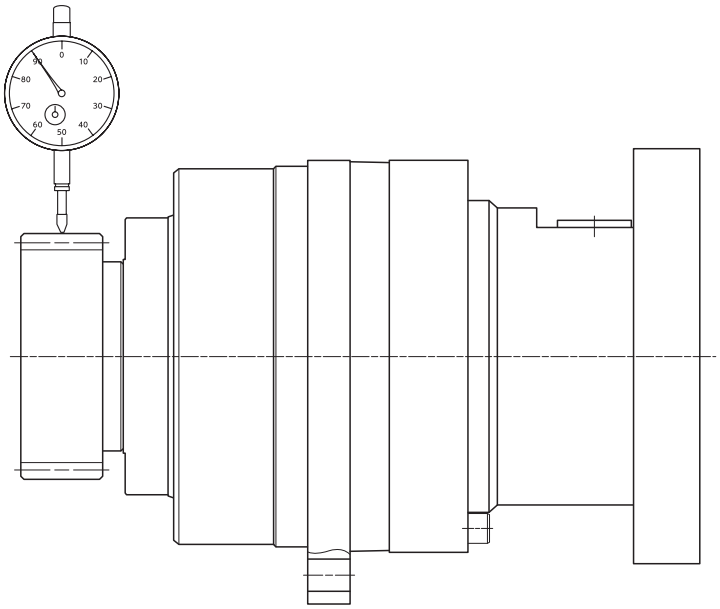

■ **Lubrication**
Please contact Harmonic Drive LLC

■ **Assembly jig**
The guide rack is available.
Please contact Harmonic Drive LLC

Guide Rack Model

JK 3 – 100 – L 1 – Type

(1) (2) (3) (4) (5) (6)

(1)	Model Name	JK: Guide rack
(2)	Module	2: 2 mm 3: 3 mm
(3)	Length	1 00: 100 mm

(4)	Flank Direction	L: Left
(5)	Helix Angle	1: 19.5283°

(6)	Specifications	Blank: Standard SP: Special

Procedure for Checking the Output Bearing

A precision cross roller bearing supports the external load (output flange). Check the maximum load, moment load, life of the bearing and static safety coefficient to maximize performance.
For the calculation formula, refer to “Output Bearing Specifications and Checking Procedure" in the HarmonicPlanetary® catalog.

1. Checking the limit for linear thrust
Obtain the limit for linear thrust (Ft*max*).
→ Maximum linear thrust (Ft*max*) ≤ Allowable maximum linear thrust

2. Checking the output bearing life
Obtain the average radial load (Fr*av*) and average axial load (Fa*av*).
→ The radial and axial load coefficients are X = 1 and Y = 0.45, respectively.
→ Calculate the life and check it.

■ Calculation flow of the main bearing life of the pinion-equipped gearhead

(1) Checking the operation conditions

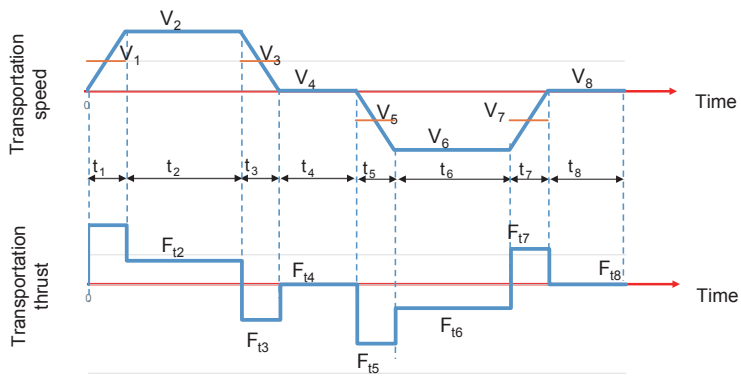

(2) Calculating the average linear thrust

$$F_{av} = \sqrt[10/3]{\frac{\sum_{k=1}^{n} V_k t_k F_{tk}^{10/3}}{\sum_{k=1}^{n} V_k t_k}} = \left(\frac{V_1 \cdot t_1 \cdot F_{t1}^{\frac{10}{3}} + V_2 \cdot t_2 \cdot F_{t2}^{\frac{10}{3}} + \cdots + V_k \cdot tk \cdot F_k^{\frac{10}{3}} + \cdots + V_7 \cdot t_7 \cdot F_{t7}^{\frac{10}{3}} + V_8 \cdot t \cdot F_{t8}^{\frac{10}{3}}}{V_1 \cdot t_1 + V_2 \cdot t_2 + \cdots + V_k \cdot tk + \cdots + V_7 \cdot t_7 + V_8 \cdot t_8} \right)^{\frac{3}{10}}$$

(3) Calculating the average radial load and average axial load

Average radial load

$$Fr_{av} = F_{av} / \cos\alpha \qquad \alpha = 20°$$

Average axial load

$$Fa_{av} = F_{av} \cdot \tan\beta \qquad \beta = 19.5283°$$

(4) Calculating the dynamic equivalent radial load

$$P_C = X \cdot \left(Fr_{av} + \frac{2(Fr_{av}\ (Lr+R) + Fa_{av}\ La)}{dp} \right) + Y \cdot Fa_{av}$$

Roller circle diameter of the gearhead output bearing	dp	m
Distance between the gearhead output bearing raceway and output flange surface	R	m
Overhang length from the gearhead output flange surface	Lr	m
Distance between the gearhead output rotational center and axial load point	La	m

X: Radial load coefficient
Y: Axial load coefficient

Gearhead Series	Module [mm]	Number of teeth of pinion gear	Basic dynamic load rating [N]	Lr [mm]	La [mm]	R [mm]	dp [mm]
HPG-32R HPG-32A	2	35	20500	0.0320	0.037	0.014	0.085
		40	20500	0.0320	0.042	0.014	0.085
		45	20500	0.0320	0.048	0.014	0.085
HPG-50A	3	31	41600	0.0405	0.049	0.019	0.123
		35	41600	0.0405	0.056	0.019	0.123
		40	41600	0.0405	0.064	0.019	0.123

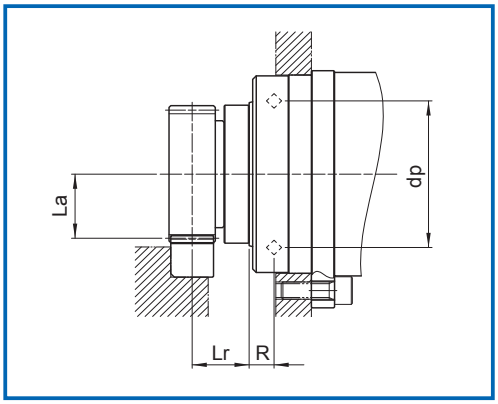

(5) Load coefficient if only linear thrust is applied

(If other external force is applied, separate calculation is required. For the calculation formula, refer to “Output Bearing Specifications and Checking Procedure" in the HarmonicPlanetary® catalog.)

$$X = 1 \quad Y = 0.45$$

(6) Calculating the average transportation speed

$$V_{av} = \frac{\sum_{k=1}^{n} V_k t_k}{\sum_{k=1}^{n} t_k} = \frac{V_1 \cdot t_1 + V_2 \cdot t_2 + \cdots + Vk \cdot tk + \cdots + V_7 \cdot t_7 + V_8 \cdot t_8}{t_1 + t_2 + \cdots + tk + \cdots + t_7 + t_8}$$

Vav	Average transportation speed	m/sec
V	Transportation speed	m/sec
t	Time	sec

(7) Calculating the average output rotational speed

$$N_{av} = \frac{60 \times Vav}{d \cdot \pi}$$

Nav	Average output rotational speed	rpm
Vav	Average transportation speed	m/sec
d	Pinion pitch circle diameter	m

(8) Calculating the life

$$L_{10} = \frac{10^6}{60 \times Nav} \times \left(\frac{C}{fw \cdot Pc} \right)^{10/3}$$

L10	Life	hour
Nav	Average output rotational speed	rpm
C	Basic dynamic load rating	N
Pc	Dynamic equivalent radial load	N
fw	Load coefficient	

Load coefficient

In the smooth operation without any shocks and vibrations	1.0 to 1.2
In the normal operation	1.2 to 1.5
In the operation accompanied by a shock and vibration	1.5 to 3.0

Harmonic Drive LLC

Boston US Headquarters
247 Lynnfield Street
Peabody, MA 01960

T: 800.921.3332
T: 978.532.1800
F: 978.532.9406
www.HarmonicDrive.net

New York Sales Office
100 Motor Parkway, Suite 116
Hauppauge, NY 11788

California Sales Office
333 W. San Carlos Street, Suite 1070
San Jose, CA 95110

Chicago Sales Office
137 N. Oak Park Ave., Suite 410
Oak Park, IL 60301

Group Companies

Harmonic Drive Systems, Inc.
6-25-3 Minami-Ohi, Shinagawa-ku
Tokyo 141-0013, Japan

Harmonic Drive AG
Hoenbergstrasse, 14, D-6555
Limburg/Lahn Germany

Harmonic Drive and Harmonic Planetary are registered trademarks of Harmonic Drive LLC.

Rev 20191105